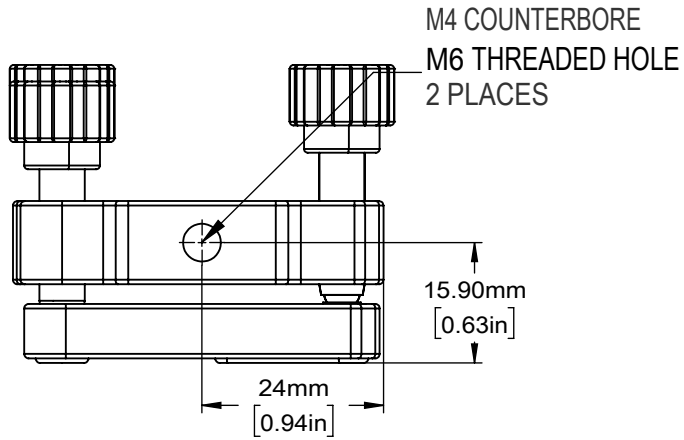

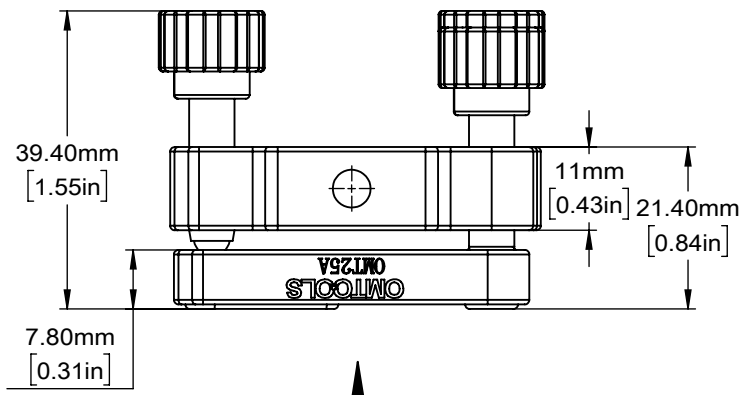

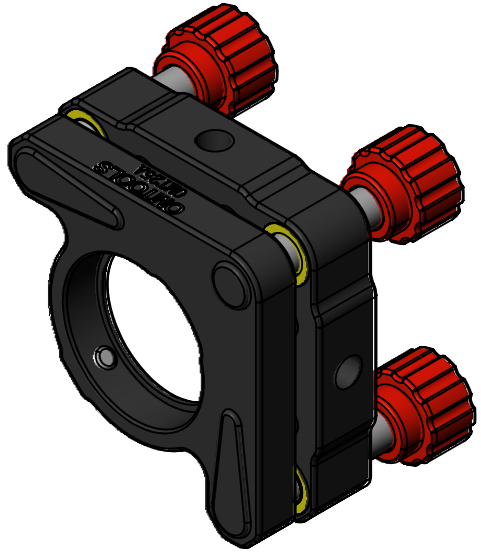

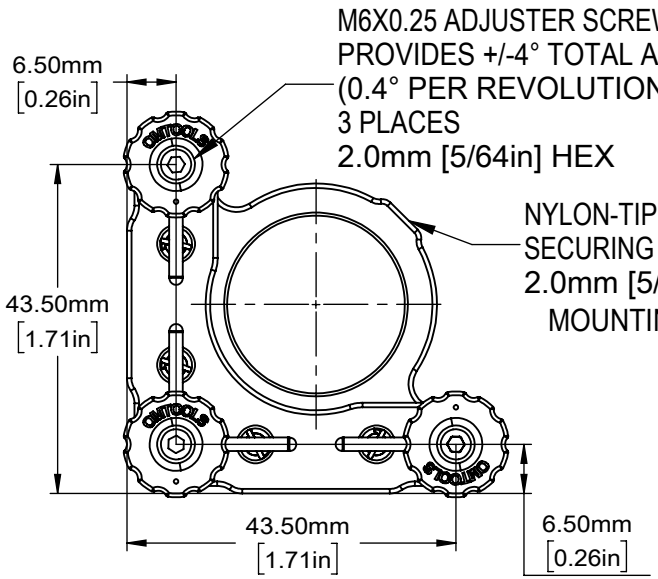

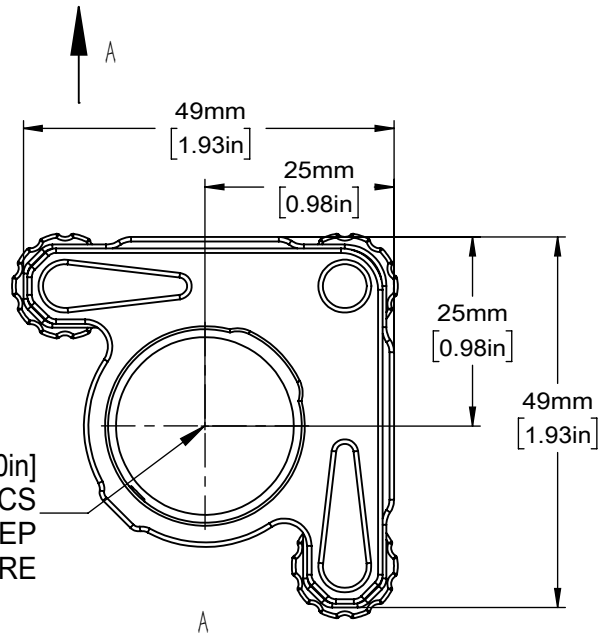

DRAWING PROJECTION		OMTOOLS	
REV	A0	OMT25A	
DRAWN	TODD		
DATE	2020/5/26	WEIGHT	SCALE
FOR INFORMATION ONLY NOT FOR MANUFACTURING PURPOSES		0.08kg	1:1